A-SAFE

eFlex Single Traffic Barrier

PRH-1032-A-SAFE-15022024-2

Production

Dimensions (mm/inches)

- **A** 180 / 7
- **B** 180 / 7
- **C** 14 / ⅝
- **D** 500 -2000 (200 increments)
  19⅔ - 78¾ (19⅔ increments)
- **E** 283 / 11⅛
- **F** 456 / 18
- **G** 204 / 8
- **H** 158 / 6⅜
- **I** 158 / 6⅜

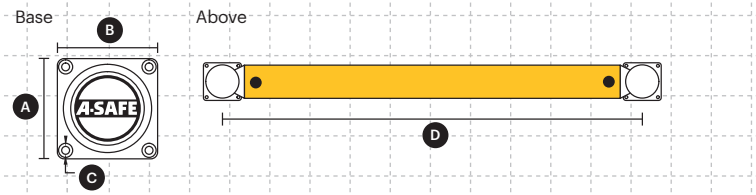

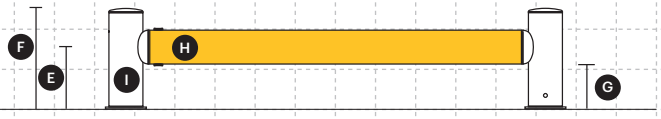

Colour Combinations

Standard

Post
Standard Black
RAL 9005*
PANTONE Black

Rail
Standard Yellow
RAL 1007*
PANTONE 7548*

Non Standard Options

Rail
Black
RAL 9005*
PANTONE Black

*Please note that the RAL and PANTONE colours listed are the closest match to standard A-SAFE colours, but may not be exact matches of the actual product colour and should be used for guidance only.

Product Material

Post and rails

MEMAPLEX™

Ultimate strength polymer created from an exclusive composition of the most sophisticated polyolefins and rubber additives, expertly blended for unequalled strength and flexibility.

Standard base

Zinc nickel, electrophoretic coating

Fixings

Steel

Weight of product

Posts	
End Post	11.97 Kg / 26.39 lbs
Mid Post	13.81 Kg / 30.45 lbs

Rails	
Typical Rail Length	Rail Diameter (mm/inches)
	158 / 6⅜
1000 / 39⅜	3.34 Kg / 7.36 lbs
1500 / 59	5.45 Kg / 12.02 lbs
2000 / 78¾	7.56 Kg / 16.67 lbs

Minimum order quantities

Not applicable on this product

Suitability

Environment

Internal and External use

ATEX Suitability

Not suitable in an explosive atmosphere

Standard Base and Fixing

Zinc nickel, electrophoretic coating

12mm Hex Head Through Bolt, Z/P

Vehicle Suitability

Lightweight Counterbalance FLT	Heavy Duty Counterbalance Truck	Electric Reach Truck	Horizontal Order Picker

Fit for purpose application

Building and equipment protection	Corridor and wall protection	Column protection	Projects machinery

Impact Zone
204 - 362mm
(8 - 14¼ inches)

Material Properties	MEMAPLEX™
Temperature Range	-10°C to 50°C
Ignition Temperature	370°C to 390°C
Flash Point	350°C to 370°C
Toxicity	Not Hazardous
Chemical Resistance	Excellent - ISO/TR 10358
Weathering Stability (Grey Scale)	5/5*
Light Stability (Blue Wool Scale)	7/8**
Static Rating (Surface Resistivity)	10^{15} - 10^{16} Ω
Hygiene Seals	No

* Weathering scale 1 is very poor and 5 is excellent ** Light stability scale 1 is very poor and 8 is excellent

Fire information

Manufactured from polypropylene. Polypropylene has an ignition temperature of 370º Celsius which is significantly higher than materials such as wooden pallets or polymers such as flexible PVC. This means that for combustion of an A-SAFE barrier to occur, a facility fire would need to be both large and well advanced, by which time any personnel would have already been evacuated to safety.

Polymer has been engineered to remain stable up to a temperature of 350º Celsius. In contrast, PVC starts breaking down at between 249º Celsius and 273º Celsius, and materials such as wood will burn instantly.

Our material has been specially developed to minimise the release of smoke during combustion. Furthermore, unlike environmentally hazardous polymers like PVC, it does not release harmful dioxins, hydrogen cyanide or hydrogen chloride when burnt.

Environmental information

Research conducted by a leading plastic solutions company* showed that producing one metric tonne of polymer generates less carbon emissions than producing a tonne of steel**. Therefore, from the very outset of raw material production, polymer provides a significant CO_2 saving over steel.

For more information visit A-SAFE.com

* http://www.borealisgroup.com ** www.liloontheweb.org.uk/handbook/carbonfootprint

Recycling Information			
Packaging	Post and Rails	Fixings	Bases
Mixed Recycled	5	Steel	Steel

*Fixings

Fixing Type	Item No.	Description	Nom. Drill Hole (W)	Min. Drill Depth	Wrench Size	Torque Setting	Qty per Pack	Per Post
Standard	B-02-01-0036	12mm Hex Head Through Bolt, Z/P	12mm / ½"	85mm / 3⅜"	13mm / ½"AF	22.5Nm / 17ft/lb	4	1
Countersunk	B-02-01-0039	12mm CSK SKT Head Through Bolt, Z/P	12mm / ½"	95mm / 3¾"	5mm / 3/16"AF	22.5Nm / 17ft/lb	4	1
**Chemical/Resin	B-02-01-0044	Chemical Anchor Stud 12 x160mm z/p	14mm / 9/16"	100mm / 4"	19mm / ¾"AF	40Nm / 30ft/lb	1	4
***Removable	B-02-01-0042	Internal-threaded anchor socket M12, Z/P	20mm / 25/32"	125mm / 5"	-	40Nm / 30ft/lb	1	4
	B-02-02-0005	M12x35mm Hex Head set screw z/p			19mm / ¾"AF		1	4
	B-02-02-0013	M12 Form C Washer z/p					1	4

Resin Tube	B-02-01-0046	Chemical Resin 380ml tube

** 1no Tube of resin required per 10no fixing bolts *** 1no Tube of resin required for 8no fixings bolts

Ground Works

Before you install A-SAFE barrier we advise a site survey of the ground intended for the product. This information is crucial as the ground conditions can vastly affect the performance of the safety barrier.

We should always request to see the Operations and Maintenance Manual (OMM) for the building we are installing barrier. This document will give key information such as -

- Depth of concrete slab installed
- Areas where rebar is being used
- Areas where services are located in the building
- Operating temperatures of the facility

If an OMM is not available, we should request to produce an on-site pull-out test. The pull-out test gives us all the information we need to evaluate if an install is possible.

For more information please refer to the Ground Works document in the Product Hub on the A-SAFE SharePoint.

Concrete Pad

130mm OD Post
12mm Fixing Bolts
180 x 180mm
Base Plate

- A Concrete Pad
- B Hardcore
- C Damp Proof Membrane

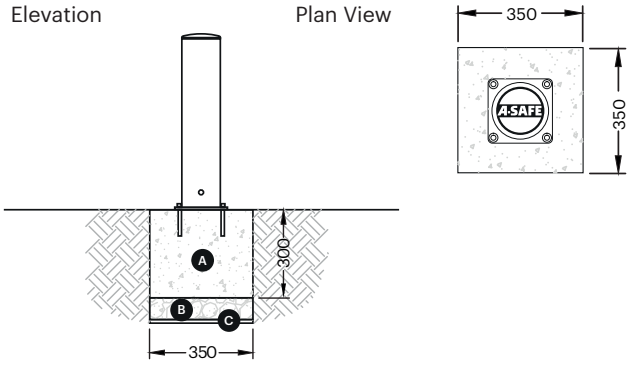

Dimensions of the concrete pad shown are a minimum size only.

***IMPORTANT.** The fixings data detailed above are based on A-SAFE supplied fixings. If a customer uses their own fixings, they must refer to specific install instructions.

Part Codes

1. M-01-01-0045 = Post Cap – 158 - Black
2. B-04-01-0012 =Post Pin 36 OD x 395mm
3. S-01-11-0009 = eFlex ST Post, Black - End
4. B-02-01-0036 = 12mm Fixings, R-SPL-II-08090/20L – (4PK)
5. M-01-01-0046 = Coupling Cover - 158
6. S-01-02-0041 = Coupling and Sleeve - 158
7. M-01-01-0031 = Lock Pin Cap Black x 2 No
8. M-01-01-0048 = Long Lock Pin -158
9. P-01-04-0009 to P-01-04-0024 = eFlex Rail 158mm OD, Yellow 500mm to 2000mm – 500mm Increments

Data Sheets

Testing Videos

CAD

Install Documents

Certificates

If you have any questions please contact
the product management team at A-SAFE HQ
Product.Management@asafe.com

A-SAFE
PIONEERING WORKPLACE SAFETY

PRODUCTHUB

Document Reference	PRH-1032-A-SAFE-15022024-2
Document Description	eFlex Single Taffic Barrier
Date Created	November 2023
Author/s	Matthew Briggs
Checked by	Jerry Budby
Approved by	Ben Allen
Revision	Version 2 - February 2024